AUTHORS

Mohammad Sahil Khan
Jamia Millia Islamia, New Delhi

ABSTRACT

The Autonomous Drone Development, aiming to conceive, design, and develop a remotely piloted rotary-wing drone for carrying payloads to designated areas.

The process began with an extensive literature review to understand the design criteria of similar quadcopters. Key components, including the motor, propeller, battery, ESC, transmitter, and receiver, were selected based on calculated parameters such as thrust ratio, flight time, torque, and current draw. The design phase involved preliminary calculations, theoretical performance, estimations and adjustments to components.

Design and 3D modeling were executed using SolidWorks, with simulations conducted on SolidWorks Simulation to ensure the UAV met performance expectations. Thrust calculations were performed to verify the viability of the design. If the desired performance was not achieved, adjustments were made to optimize parameters until the final design was reached. This report encapsulates the design process, analysis, and substantiation of the project, showcasing the steps taken to reach the final UAV configuration.

The autonomous drone mission integrates GPS navigation, vision-based landing, and servo-controlled mechanisms for precise execution. A Raspberry Pi 4B processes QR codes, verifying data before initiating the egg drop. The SIYI HM30 FPV system transmits decoded data to the ground station.

CONCEPTUAL DESIGN

The conceptual design of our quadcopter was driven by the need to balance performance, durability, and functionality. Our design philosophy centered around creating a lightweight yet robust structure that could handle the task efficiently.

Design Overview

The quadcopter features a compact, symmetrical frame that ensures even weight distribution and enhances flight stability. The design incorporates four rotors positioned to provide maximum lift and stability, with an emphasis on:

Frame Geometry: A balanced and symmetrical frame to maintain equilibrium during flight.

Motor Placement: Strategic placement of motors to optimize thrust distribution, ensuring smooth vertical takeoff and maneuverability.

Component Integration: The electronic components (flight controller, sensors, and battery) are centrally located to improve the center of gravity and reduce drag.

Figure 1. Final Assembly

Material Selection

The selection of appropriate materials is crucial in quadcopter design, directly impacting performance, durability, and efficiency. This section outlines our material choices and the rationale behind them, considering factors such as weight, strength, cost, and environmental conditions.

Selection Criteria:

Our material selection focused on weight, strength, durability, cost-effectiveness, availability, and environmental factors like temperature and humidity.

Frame Material:

We selected polycarbonate for the frame due to its high impact resistance (600-850 J/m), lightweight nature (1.2 g/cm³), excellent dimensional stability, and thermal resistance (140°C at 0.45 MPa). Its durability and strength ensure the drone withstands collisions and rough landings**.**

Propeller Material:

We chose ABS (Acrylonitrile Butadiene Styrene) for the drone propeller due to its lightweight nature, high impact resistance, and durability. With excellent toughness, flexibility, and thermal stability, ABS ensures efficient aerodynamics and minimal deformation under stress, making it an ideal material for stable and high-performance drone propulsion.

Frame Design

Our design features a lightweight, symmetrical frame that evenly distributes weight across all four motors, minimizing imbalances during flight.

Frame Dimensions: The frame measures 450mm x 450mm, providing a balanced structure that maximizes stability and aerodynamic performance.
Geometry: We adopted an X-frame configuration for its simplicity and effectiveness in maintaining stability, while also ensuring that the quadcopter's arms had minimal drag during flight.
Compact Design: The quadcopter's arms and motor mounts were kept as short as possible to reduce weight and aerodynamic drag without compromising the required spacing for optimal propeller performance.

Figure 2. Frame Design

MECHANISM OF ROBOTIC ARMS FOR EGG GRABBING AND DROPPING

Introduction

The robotic arm mechanism designed for the drone is specifically engineered to grab an egg, hold it securely, and then drop it with precision while ensuring minimal impact to prevent breakage. The mechanism operates using a cam-driven jaw system powered by a servo motor, along with springs and a high-friction gripping surface for stability. The total length of the mechanism is 120 mm.

Mechanical Components

Base - Holds the entire assembly and acts as the foundation.
Jaws (x3) - Three curved gripping arms hinged to the base using screws.
Cam Mechanism - A rotating cam attached to a servo motor controls the movement of the jaws.
Servo Motor - Provides controlled rotational motion to the cam.
Springs (x3) - Connected to each jaw and further attached to a central nail-like structure on the top stand.
Top Stand & Top Connector - Structural support for the spring and the entire gripping mechanism.
High-Friction Material - Applied to the inner gripping surface of the jaws to prevent the egg from slipping.

Working Mechanism

The robotic arm operates in two distinct phases:

Phase 1 - Egg Grabbing Mechanism

As the cam rotates 60 degrees, its larger outer radius comes into contact with the jaws, initiating movement. This bottom contact forces the jaws outward at the top and inward at the bottom, securely gripping the egg. Springs provide tension, ensuring the jaws maintain a firm yet controlled hold.

Phase 2 - Egg Dropping Mechanism

As the cam rotates back by 60 degrees, its smaller radius comes into contact with the jaws, pulling them inward. This causes the bottom of the jaws to move outward, releasing the egg. Springs control the movement, ensuring a slow, controlled drop, while high-friction material prevents unintended slips.

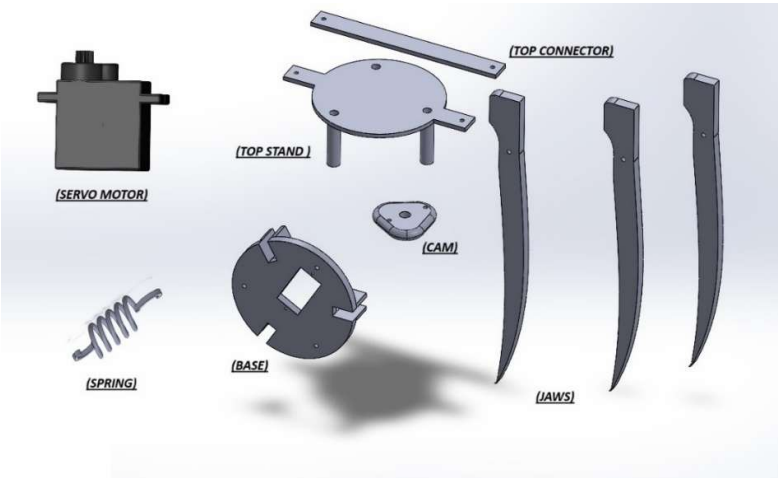

Figure 3. Components of Payload dropping mechanism

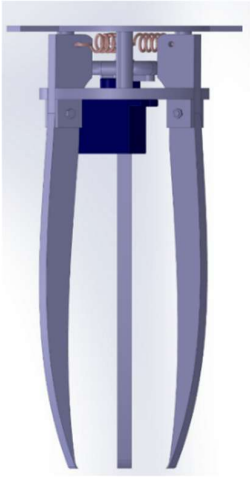

Figure 4. Assembled payload dropping mechanism

Key Design Considerations

The robotic arm system integrates several key features for precise and safe egg transportation. A slow-moving servo motor ensures a gradual release, minimizing impact forces and reducing the risk of breakage. The spring-loaded jaw system regulates the opening and closing force, acting as a damping mechanism to prevent sudden jerks. Additionally, the jaws are equipped with a high-friction gripping surface coated with rubber or silicone to enhance grip strength and prevent unintentional slipping during flight. This combination of cam-driven control, spring tensioning, and friction-enhanced gripping ensures secure handling and a gentle drop, making it perfect for delicate object delivery and controlled release in drone applications.

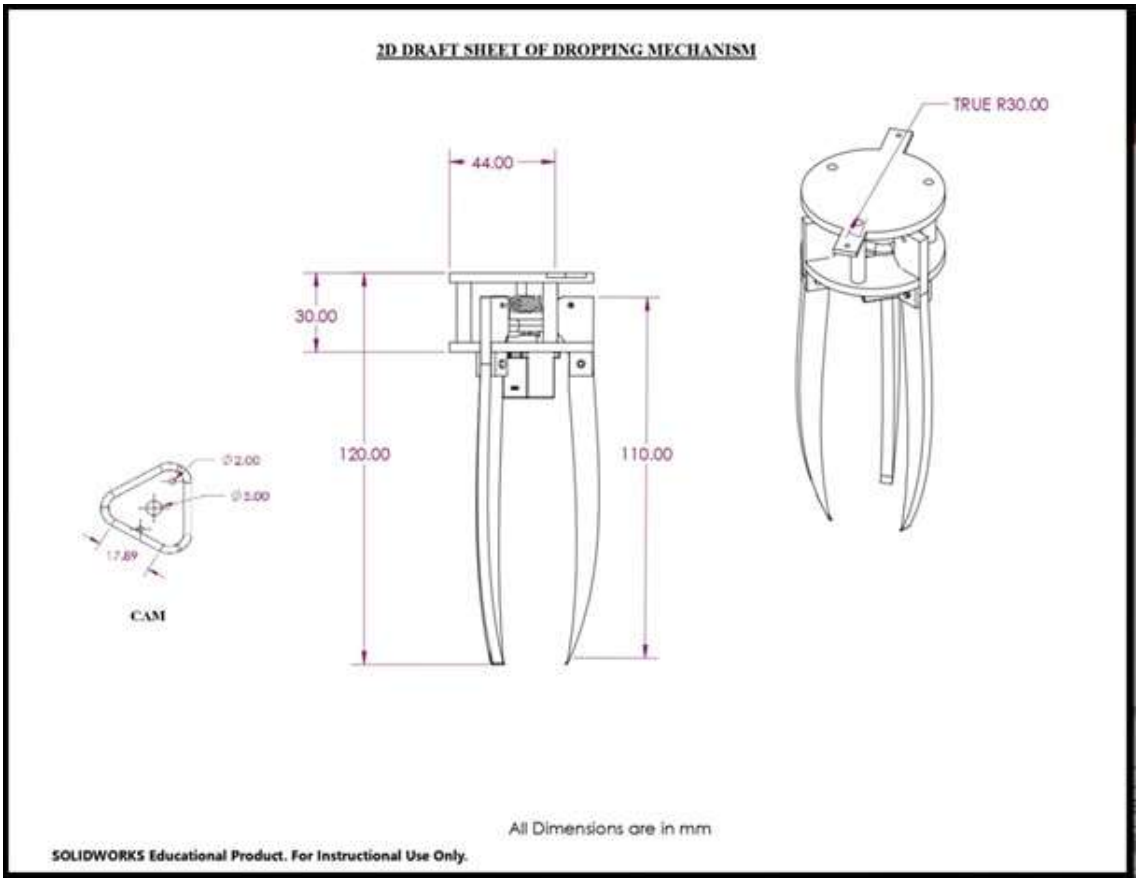

Figure 5. 2D draft sheet of dropping mechanism

CAD Models

Figure 7. Top view

Figure 8. Side view

Figure 9. Isometric view

STRUCTURAL ANALYSIS OF DRONE FRAME

Load Conditions: Each arm experiences a thrust force of 10N, acting at the motor mounting points.

Material Used: PA66GF (Polyamide 66 with Glass Fiber Reinforcement)

- Density: 1.35 g/cm³
- Young's Modulus: 7.5 GPa
- Tensile Strength: 180 MPa
- Flexural Strength: 250 MPa
- Poisson's Ratio: 0.35
- Impact Resistance: High (suitable for drone applications)

Boundary Conditions:
Fixed supports applied at the central body attachment points. Thrust loads applied at motor mounting positions.

Results:
Maximum deformation: (to be added from simulation results)
Maximum stress: (to be added from simulation results) Factor of safety: (to be added from simulation results)

Figure 10. Von Mises Analysis

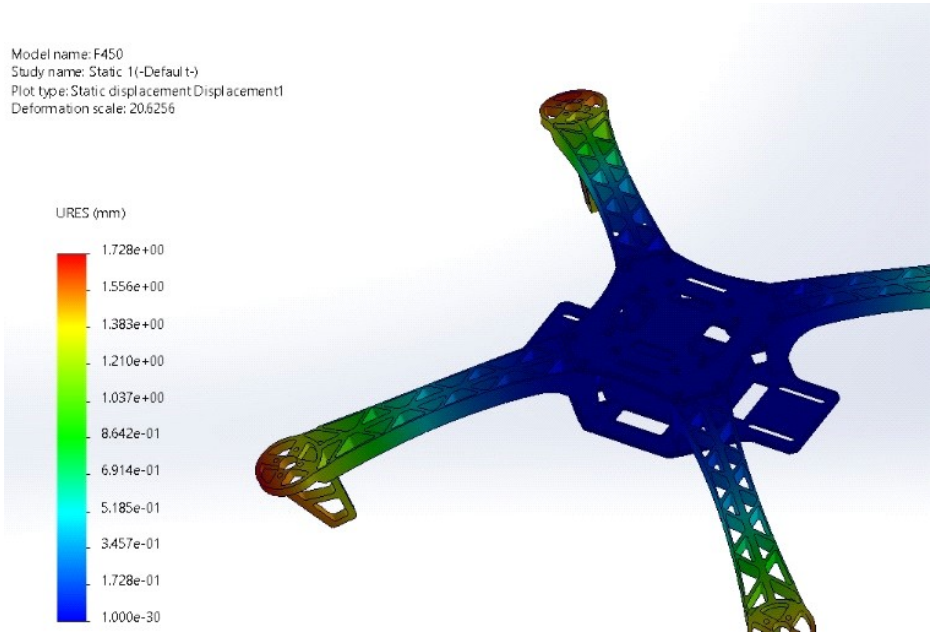

Figure 11. Static Displacement Analysis

Observations:
Stress concentration observed at the joint between the arms and central body.
Deformation within permissible limits, ensuring structural reliability.
The frame can withstand the applied loads with a sufficient safety margin.

STRUCTURAL ANALYSIS OF TOP PLATE AND BASE PLATE

Load Conditions: The base plate experiences a 5N load due to mounted components**.**

Material Used: PA66GF (Polyamide 66 with Glass Fiber Reinforcement)

- Density: 1.35 g/cm³
- Young's Modulus: 7.5 GPa
- Tensile Strength: 180 MPa
- Flexural Strength: 250 MPa
- Poisson's Ratio: 0.35
- Impact Resistance: High (suitable for drone applications)

Boundary Condition
Fixed constraints at attachment points with the frame.
Load applied as a distributed force over an area of the base plate.

Results:
Maximum deformation for Top Plate and Bottom Plate : 0.353
and 0.4006 mm (observed at the center of the base plate)

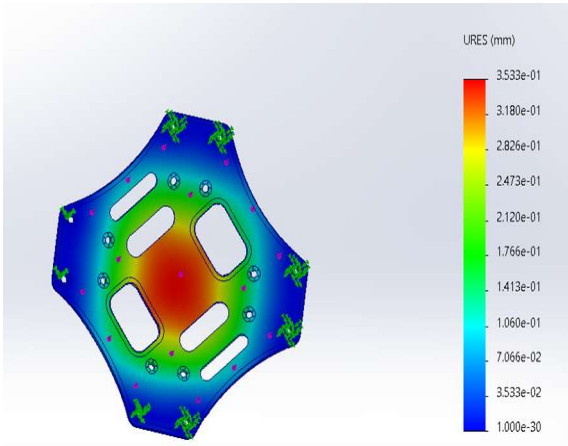

Figure 12. Von Mises Analysis of Top Plate

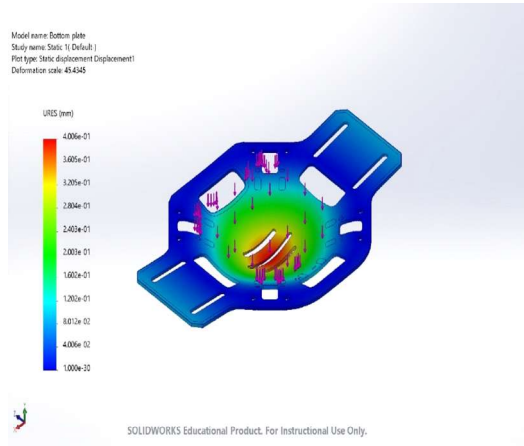

Figure 13. Von Mises Analysis of Bottom Plate

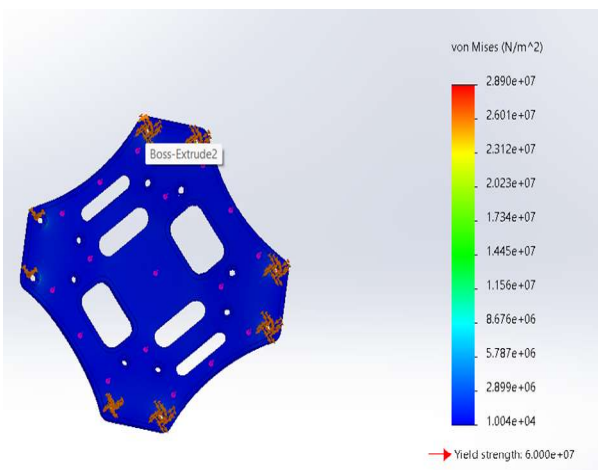

Figure 14. Static Displacement Analysis of Top Plate

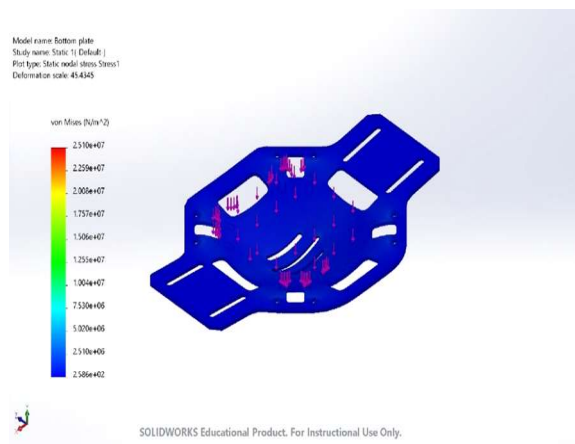

Figure 15. Static Displacement Analysis of Bottom Plate

Observations:
Minimal deformation observed, ensuring stability of mounted components.
Uniform stress distribution with no critical failure points.
The top plate is structurally capable of handling the applied load

FLIGHT CONTROLLER

A drone flight controller is the system that processes sensor data and controls the drone's movements, ensuring stable flight and precise maneuvering.

TABLE 1. SPECIFICATION OF FLIGHT CONTROLLER

Model	Radiolink Pixhawk Autopilot Drone Flight Controller
Frequency (Hz)	168
Processor	32bit STM32F427 Cortex M4 core with FPU
Gyro	ST Micro L3GD20H 16 bit, Invensense MPU 6000
Barometer	MEAS MS5611
On-Board Sensors (Y/N):	ST Micro LSM303D 14 bit accelerometer/magnetometer
Dimensions (L x W x H) mm	Flight Controller Module: 85 * 52 * 15mm
Weight (g):	Flight Controller Module: 37.6g, Standard Baseboard: 51g

GPS MODULE

A GPS module in a drone provides real-time location data, enabling navigation, waypoints tracking, and precise positioning for autonomous flight and geospatial tasks.

TABLE 2. SPECIFICATION OF GPS MODULE

Model	NEO-M8N
Receiver Type	72-channel Ublox M8 engine.
Main Chip	Ublox NEO-M8N
Position Accuracy (Meter)	2, 2.5

Acceleration (g)	<4
Navigation Update Rate	up to 18 HZ.
Co-Ordinate System	WGS-84
Capture Time	0.1s Average
Avg Cold Start Time (s)	30
Warm Start Time (s)	1
Maximum Altitude (m)	18000
Input Voltage (V):	0.5 to 3.6
Dimensions (L x W x H) mm	54 x 22 (Dia x W)
Weight (g):	34g

TRANSMITTER AND RECEIVER

The transmitter and receiver in a drone communication system enable wireless control and data exchange. The transmitter sends control signals from the operator to the drone, while the receiver on the drone decodes these signals to execute commands, ensuring real-time responsiveness and smooth operation during flight.

TABLE 3. SPECIFICATION OF TRANSMITTER AND RECEIVER

Model	FlySky FS-i6 2.4G
No. of Channels:	6
Frequency (GHz):	2.4
Bandwidth (KHz):	500
RF Power	≤20 dBm
Sensitivity (dBm):	-105
Power	6V (4 x 1.5AA Not Included)

TELEMETRY AND IMAGE TRANSMISSION SYSTEM

The telemetry and image transmission system in a drone allows real-time data exchange between the drone and ground station, providing critical flight information and high-definition video feeds, ensuring remote monitoring and control during flight.

There are 3 parts:

1) Ground Unit
2) Air Unit
3) FPV Camera

TABLE 4. SPECIFICATION OF FPV CAMERA

Frame & Bitrate	720p 30fps 1.57Mbps H.265
Sensor	1/2.9″ CMOS
Effective Resolution	3 MP
Lens	3.2 mm, F/2.8
Camera Angle	FOV 105°
Dimensions (L x W x H) mm	42 x 42 x 25 mm
Weight (g):	23g

ON BOARD COMPUTER

The Raspberry Pi 4 Model-B with 4GB RAM serves as an onboard computer for drones, offering robust processing power for tasks like real-time data processing, computer vision, and navigation, enabling advanced autonomous flight and control.

TABLE 5. SPECIFICATION OF ON BOARD COMPUTER

Model	Raspberry Pi 4 Model-B With 4 GB RAM
Video and Sound	2 × micro HDMI ports (up to 4Kp60 supported), 2-Lane MIPI CSI Camera a Port, 2-Lane MIPI DSI Display Port, 4-Pole Stereo Audio and Composite Video Port
Operating Temperature (°C)	0 to 50
Dimensions (L x W x H) mm	85 x 56 x 19
Weight (g)	52

SERVO MOTOR

The servo motor in the egg dropping mechanism controls precise movement, enabling gradual release and smooth operation of the jaws, ensuring the egg is safely dropped without impact or breakage**.**

TABLE 6. SPECIFICATION OF SERVO MOTOR

Model	ReadytoSky 2212 920KV Brushless DC Motor
Motor KV (RPM/V):	920
Maximum Thrust (gm)	500
Rated Voltage (V):	7~12
Dimensions (L x W x H) mm	20 × 11 × 6 cm
Required ESC (A)	30
Weight (g)	56

SELECTION OF AVIONICS

1) BLDC Motor

Maximum Weight of the Quadcopter: 2370 g (2.37 kg)

Thrust-to-Weight Ratio:

For Scale flight = 2

Thrust Required:

Thrust = Thrust-to-Weight Ratio × Weight

Thrust = 2 × 2370 g = 4740 g = 4.74 kg

The required thrust for stable flight is 4740 grams (4.74 kg).

Selection:

ReadytoSky 2212 920KV Brushless DC Motor is selected since it provides the required thrust and has low ampere drawn at load which will increase the endurance of the quadcopter.

TABLE 7. SPECIFICATION OF PROPELLER AND MOTOR

Frame Size	Propeller Size	Motor Size	KV Rating
150 mm or smaller	3 inch or smaller	1306 or smaller	3000 KV or higher
180 mm	4 inch	1806	2600 KV
210 mm	5 inch	2204-2206	2300 KV-2600 KV
250 mm	6 inch	2204-2208	2000 KV-2300 KV
350 mm	7 inch	2208	1600 KV
450 mm	8/9/10 inch	2212 or larger	1000 KV or lower

2) Propellor

The test data of ReadytoSky 2212 920KV Brushless DC Motor suggests that a 9.4 × 5.0 propeller will be appropriate to generate the required thrust, therefore 9450 SF Propellers are selected.

3) **Battery**

We selected TATTU ACE 5300mah 30c/60c 14.8v 4S1P LI-PO BATTERY for the required thrust.

Flight Time:

$$\text{Flight time} = \frac{Battery\ capacity \times Battery\ discharge}{avg\ Amp\ draw} \times 60$$

$$= \frac{5300 \times 0.80}{1000 \times 35} \times 60$$

$$= 7.26 \text{ min}$$

4) **Electronic Speed Controller (ESC)**

The selected motor draws max 30amp on load therefore SIMONK 30A BLDC ESC is selected

5) **Common Power Module**

We selected Holybro PM02D Power Module High Voltage (2S -12S) for our flight controller.

6) **Propeller Guard**

We used propeller guard compatible with the F450 frame for our drone setup to provide protection for the propellers during flight.

AUTONOMOUS MISSION INCLUDING PAYLOAD MECHANISM INTEGRATED WITH QR CODE DETECTION

Introduction

The primary objective of the autonomous mission for our drone competition is to pick up an egg, transport it to a designated drop location, scan a QR code at the drop point, drop the egg safely and transmit the extracted data back to our receiver. The mission will be executed using a GPS-based navigation system and onboard processing capabilities to ensure precise and efficient task completion.

Mission Objectives

The autonomous mission consists of the following key objectives:

1. *Egg Pickup* – Securely pick up the egg using a servo-controlled mechanism.

2. *Navigation to Drop Location* – Utilize GPS-based navigation to fly from the pickup point to the designated drop location.

3. *QR Code Assisted Precision Landing* – Use the SIYI HM30 system's FPV camera to detect and align with a QR code on the ground for accurate landing.

4. *QR Code Scanning & Processing* – Scan a QR code at the drop location, extract its encoded data, and process it onboard.

5. *Data Transmission* – Send the decoded QR data back to the ground station via the SIYI HM30 Air unit transmission system.

6. *Egg Drop Mechanism* – Deploy the egg smoothly using a servo motor mechanism for controlled release.

Hardware Requirements

Pixhawk Flight Controller – Manages autonomous flight and stabilization.

Raspberry Pi – Handles vision processing, QR code scanning, and servo control.

SIYI HM30 FPV System – Enables real-time video transmission and communication and assists in vision-based landing.

Camera Module – Camera of SIYI HM30, mounted to capture the QR code for processing and assist in precise landing.

Servo Motor – Used to grip and release the egg with controlled movement.

GPS Module – Ensures accurate navigation and waypoint tracking.

Mission Execution Plan

The mission will be executed in the following steps:

Step 1: *Pre-Flight Preparation*

Load the predefined GPS coordinates of the pickup and drop locations into the flight controller.
The Raspberry Pi triggers the servo motor of payload mechanism to grasp the egg securely

Step 2: *Autonomous Takeoff s Navigation to Pick up Point*

The drone initiates an autonomous takeoff and ascends to a pre-determined altitude to avoid obstacles.
It navigates towards the pickup location using GPS waypoints.
The onboard sensors continuously monitor altitude and positional accuracy.

Step 3*: Flight to Drop Location*

The drone follows a pre-programmed GPS route to the approximate drop zone while maintaining stability.
The SIYI HM30 camera begins scanning for the QR code at the drop site to refine landing accuracy.

Step 4: *QR Code Processing Before Egg Drop*

The onboard camera scans the QR code and Raspberry Pi processes the QR code, extracts the encoded data.
If the QR code data is successfully decoded, the system proceeds to the egg drop phase.

Step 5*: Data Transmission to Ground Station*

The extracted QR code data is packaged and transmitted to the ground station via the SIYI HM30 FPV System

Step 6: *Vision-Based Precision Landing*

The onboard processing system adjusts the drone's alignment and position based on the QR code's orientation.

The drone gradually reduces altitude while continuously realigning with the QR code for precise landing.

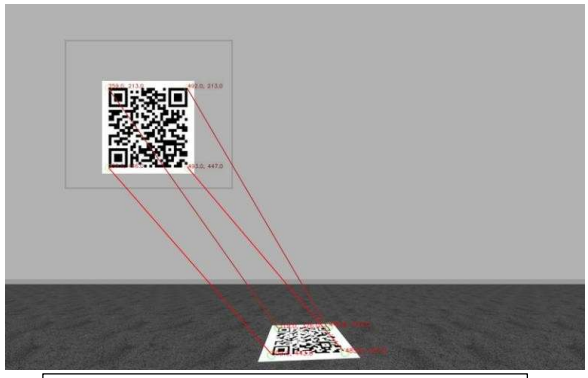

Figure 16. QR code's orientation

Step 7: *Controlled Egg Drop Mechanism*
After successful landing, the servo motor payload mechanism is activated to gradually release the egg in a controlled manner to avoid damage upon landing.

Step 8: *Autonomous Return to Base*

The drone initiates return navigation using the predefined GPS waypoints. Upon arrival, the drone autonomously descends and lands at the starting position.

UNIQUE TECHNOLOGY DEVELOPMENT

We have developed a robotic arm mechanism that is specifically engineered to grab an egg, hold it securely, and then drop it with precision while ensuring minimal impact to prevent breakage. (Refer page no. 5 of 21).

The integration of high-friction gripping surfaces, strategically placed springs, and a compact 120 mm structure ensures stability and efficiency. By leveraging mechanical precision and controlled motion, this technology enhances drone capabilities in automated object handling, paving the way for advancements in aerial delivery and robotic manipulation.

SAFETY MEASURES

GPS Geofencing – Restrict flight within predefined boundaries to prevent unauthorized entry into restricted zones.

Secure Communication– Encrypt telemetry, control, and video transmission to prevent hacking or signal interference.

Failsafe Mechanisms – Implement return-to-home (RTH) and emergency landing protocols in case of signal loss or low battery.

Obstacle Avoidance – Use LiDAR or computer vision to detect and avoid obstacles during flight.

Tamper-Proof Payload System – Secure the payload release mechanism to prevent unauthorized access or accidental drops.

Real-Time Monitoring – Enable live tracking and remote diagnostics for mission control.

Redundant Power Systems – Ensure backup batteries or failover power to prevent mid-air failures.

Authentication and Access Control – Restrict drone operation to authorized users only through password-protected or biometric-based access.